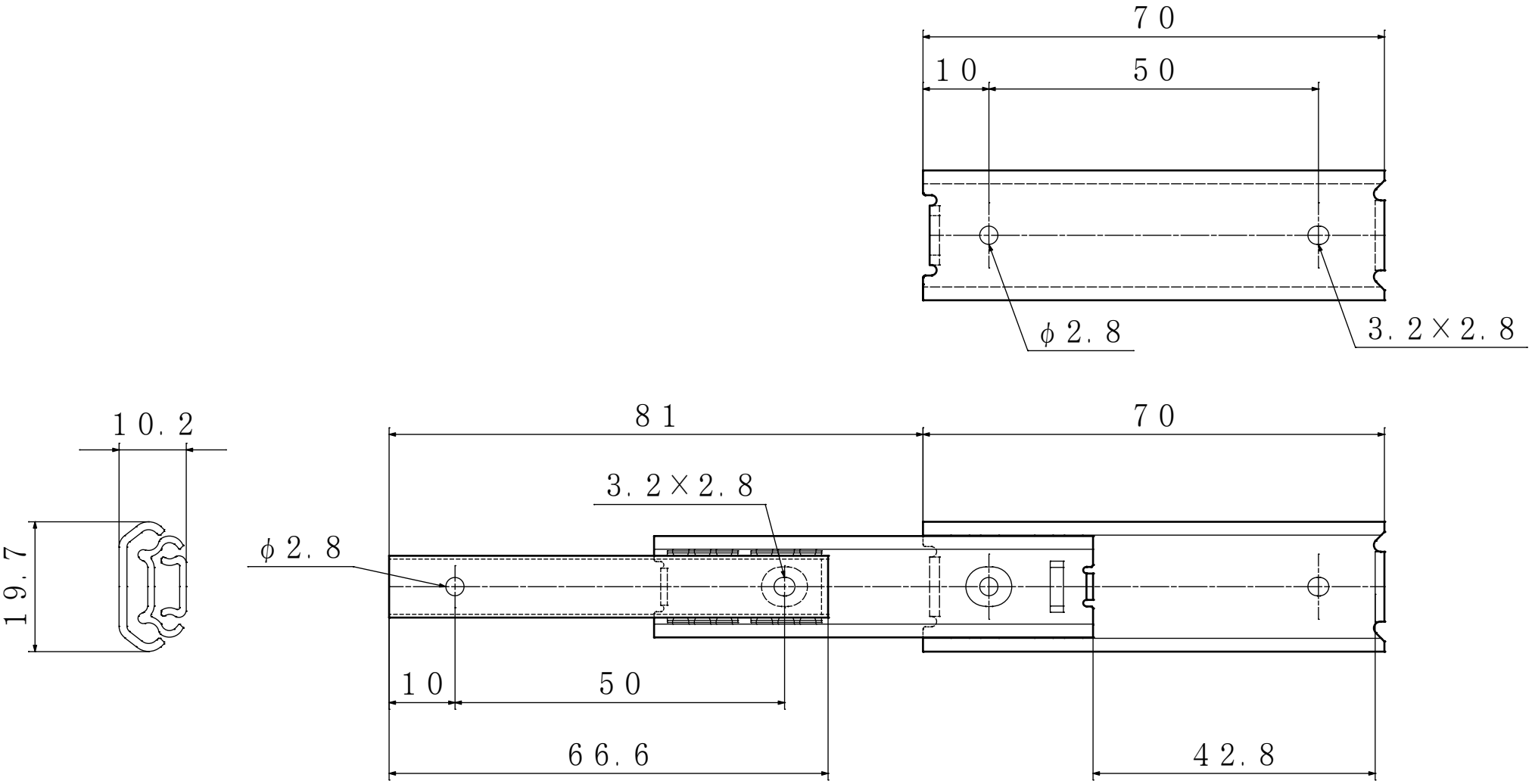
70
10
50
φ2.8
3.2×2.8
10.2
19.7
81
70
3.2×2.8
φ2.8
10
50
66.6
42.8