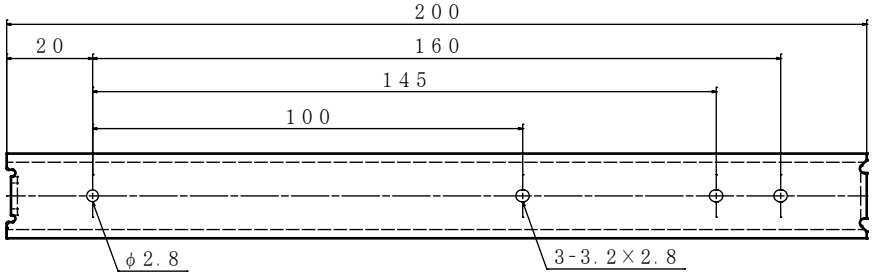
200
20
160
145
100
φ2.8
3-3.2×2.8

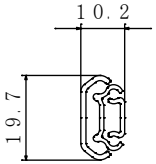
10.2
19.7

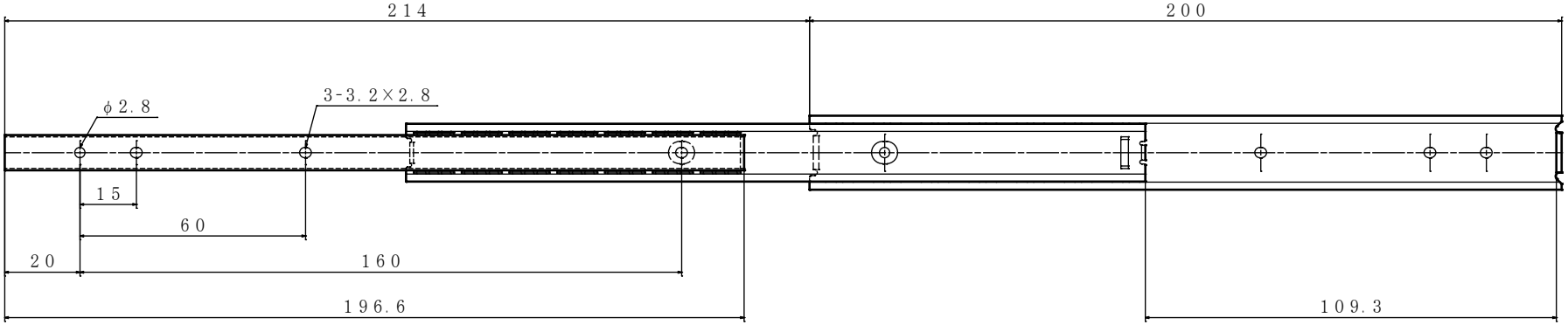
214
200
φ2.8
3-3.2×2.8
15
60
20
160
196.6
109.3