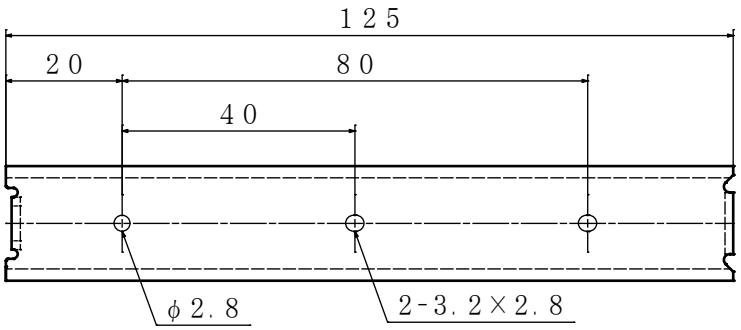
125
20
80
40
φ2.8
2-3.2×2.8

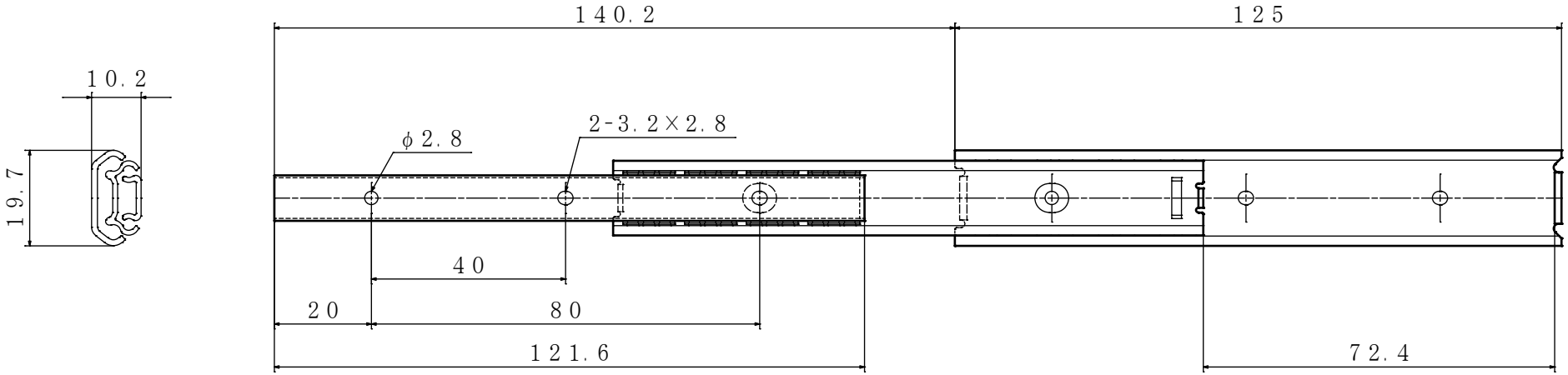
10.2
19.7
140.2
125
φ2.8
2-3.2×2.8
40
20
80
121.6
72.4