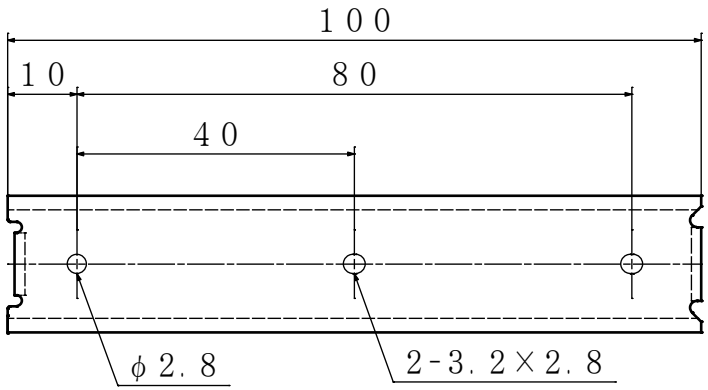
100
10
80
40
φ2.8
2-3.2×2.8

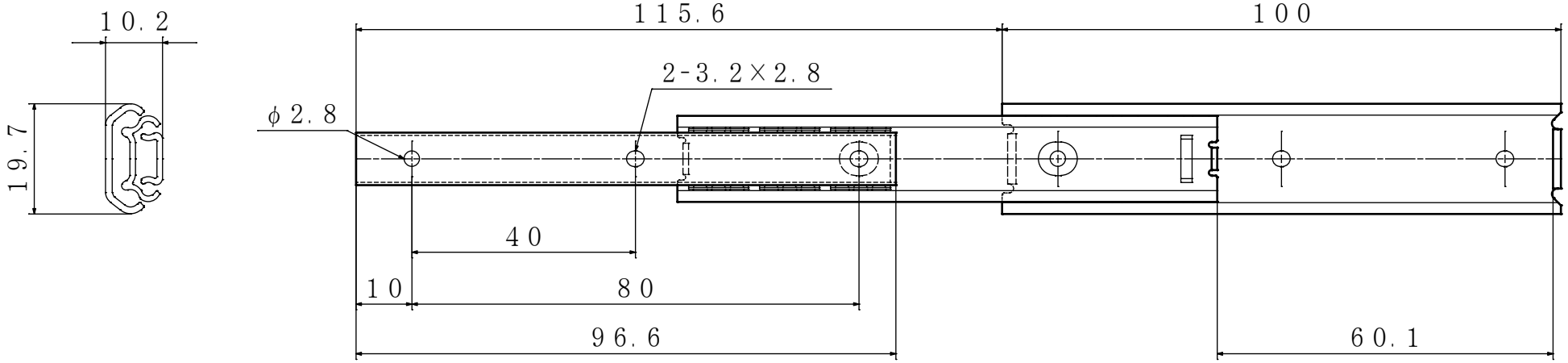
10.2
19.7
115.6
100
2-3.2×2.8
φ2.8
40
10
80
96.6
60.1