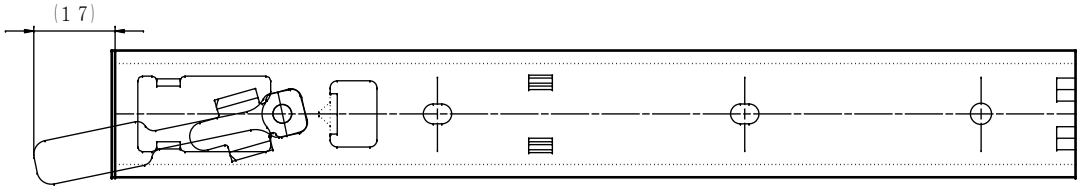
(17)

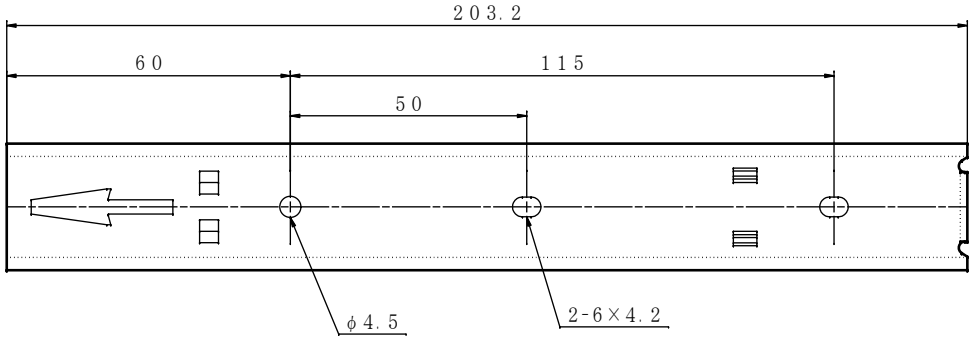
203.2
60
115
50
φ4.5
2-6×4.2

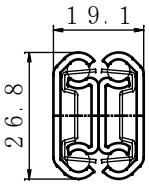
19.1
26.8

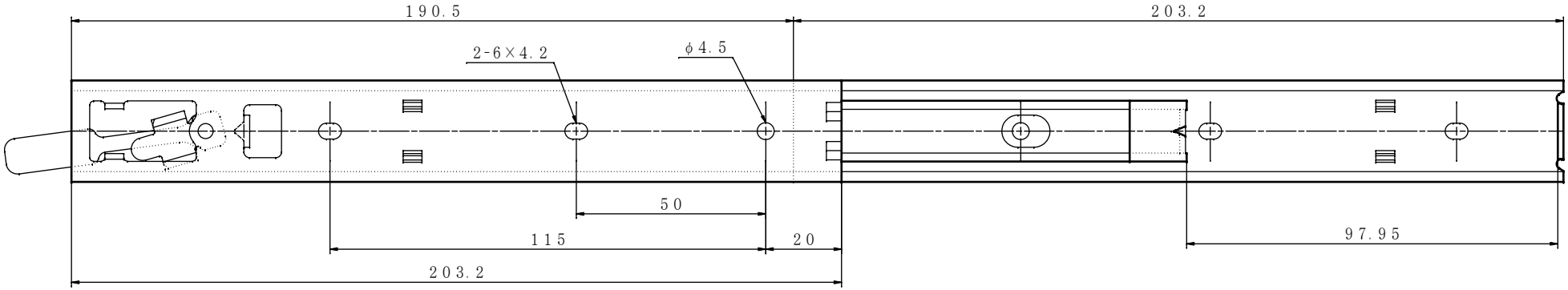
190.5
203.2
2-6×4.2
φ4.5
50
115
20
203.2
97.95