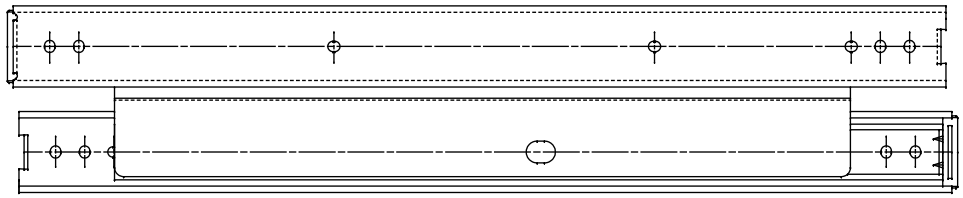

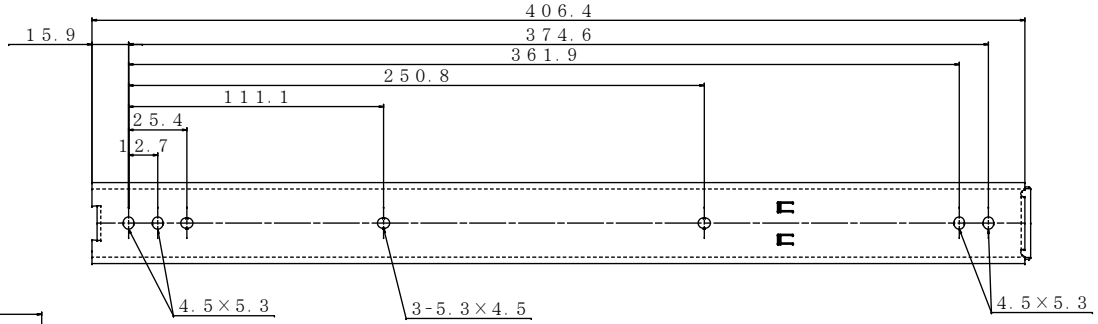
406.4
15.9
374.6
361.9
250.8
111.1
25.4
12.7
4.5×5.3
3-5.3×4.5
4.5×5.3

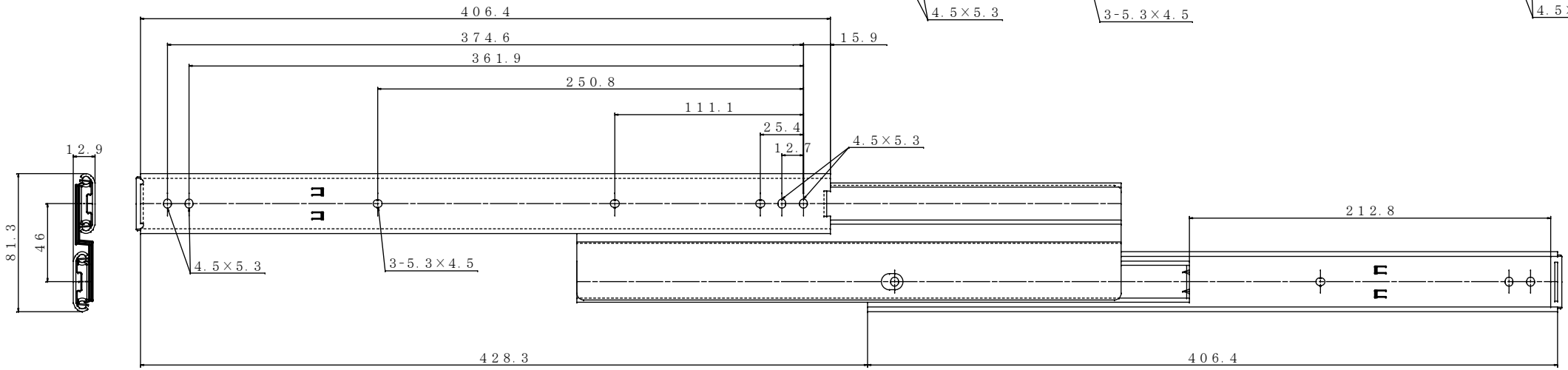
406.4
374.6
361.9
250.8
111.1
25.4
12.7
15.9
4.5×5.3
12.9
81.3
46
4.5×5.3
3-5.3×4.5
212.8
428.3
406.4