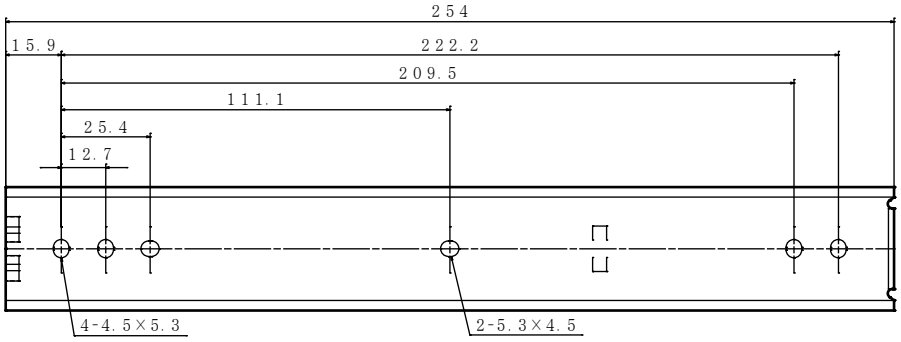
254
15.9
222.2
209.5
111.1
25.4
12.7
4-4.5×5.3
2-5.3×4.5

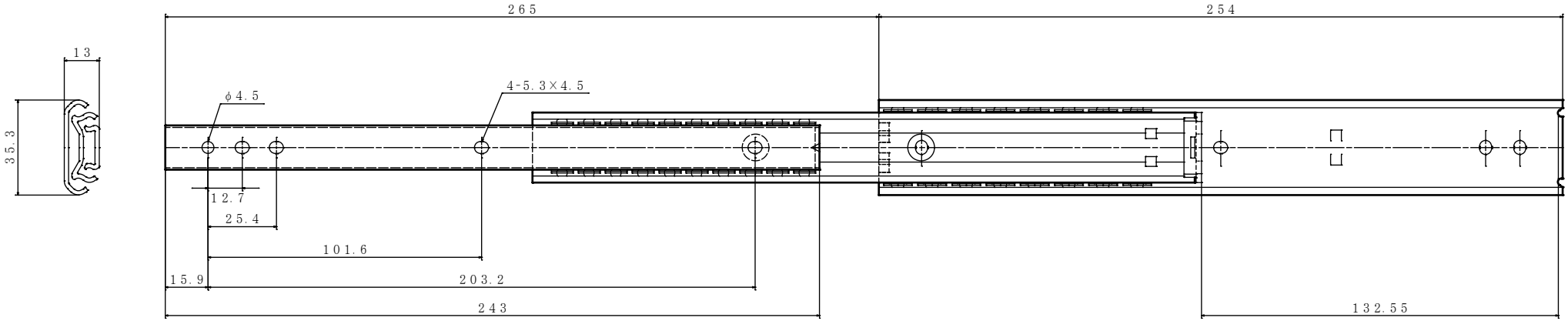
13
35.3
265
254
φ4.5
4-5.3×4.5
12.7
25.4
101.6
15.9
203.2
243
132.55